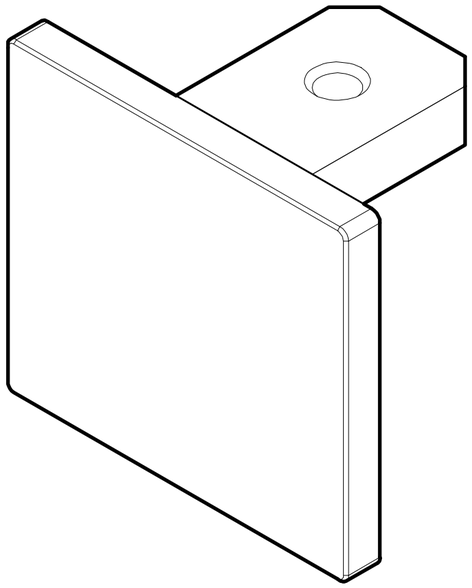

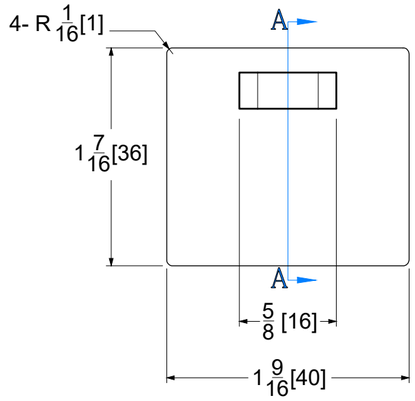

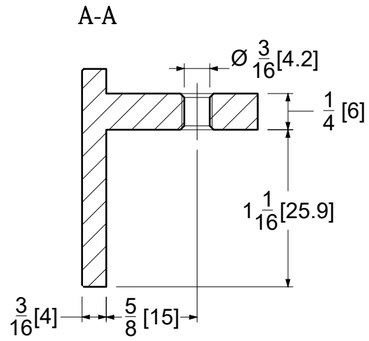

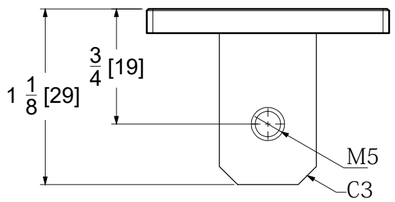

glasshardware.com

10101 NW 79th Ave
Hialeah Gardens, FL 33016
Phone: (877) 658-9008

Product: **End Cap for Square Aluminum Cap Rail**

Code: AH4036EC

Material: 6063-T6 Aluminum

Specifications:
Glass thickness: Not applicable.

Includes: One End Cap.

BEFORE PROCEEDING WITH FABRICATION, PLEASE ENSURE THAT YOU VERIFY ALL MEASUREMENTS. IT IS CRUCIAL TO DOUBLE-CHECK THE SPECIFICATIONS TO AVOID ANY DISCREPANCIES. FOR THE MOST UP-TO-DATE TECHNICAL SPECSHEETS AND CUTOUTS, KINDLY VISIT **GLASSHARDWARE.COM**

Date: 12/12/25

Sheet N°: 1/1