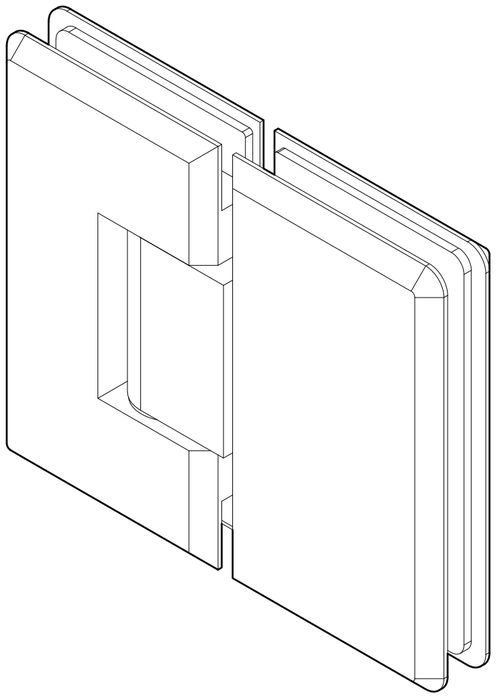

**FRONT VIEW**

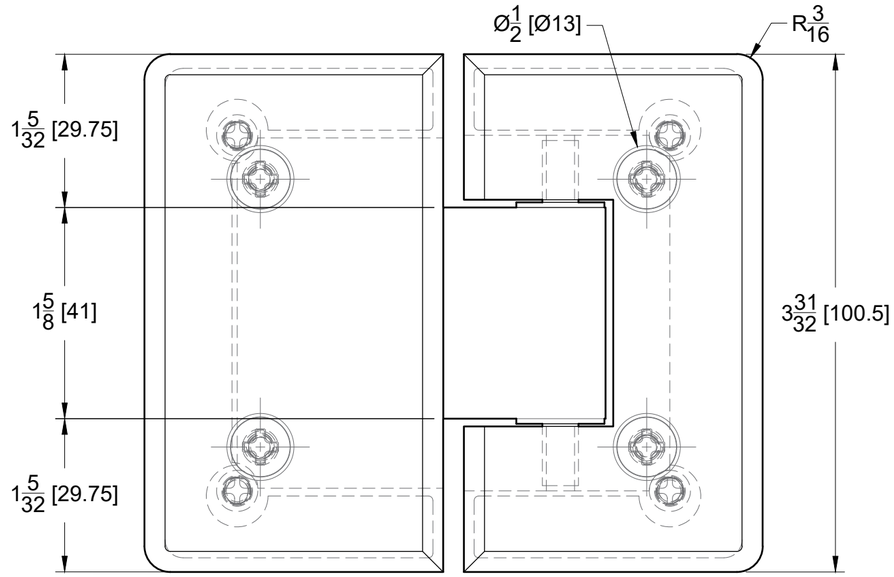


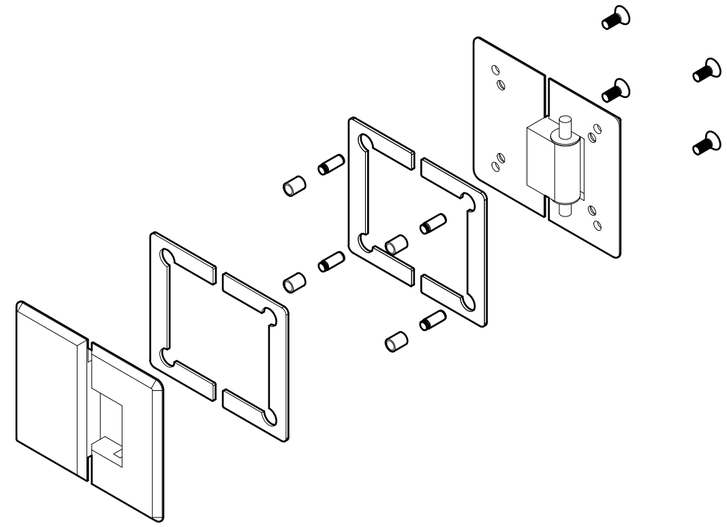

**TOP VIEW**

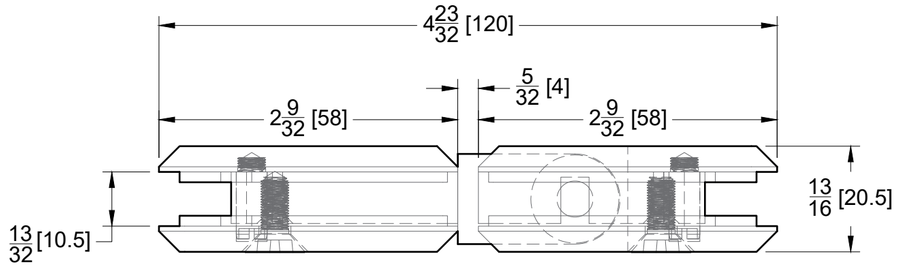


**GLASS CUT OUT**

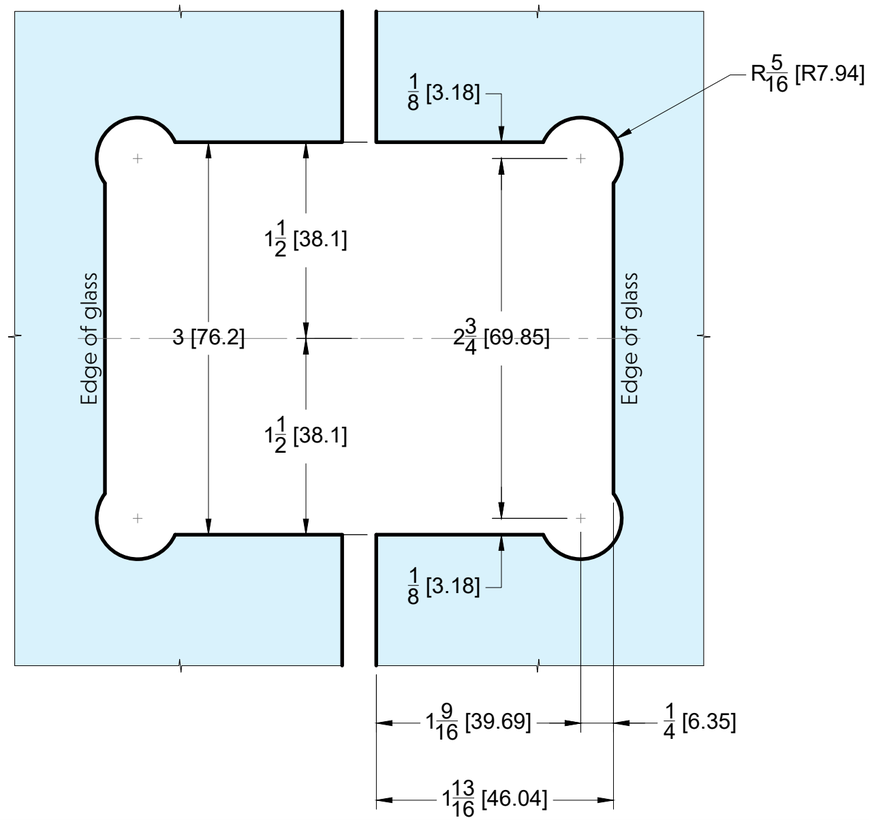



glasshardware.com

10101 NW 79th Ave
Hialeah Gardens, FL 33016
Phone: (877) 658-9008
Fax: (888) 280-2285


Product: **Heavy Duty Glass-to-Glass 180 Degree Bilboa Hinge**

Code: H303V

Material: Solid Brass

**Specifications:**

**Glass thickness:** 3/8" (10 mm) to 1/2" (12 mm).
Cutout required - Tempered glass only
**Includes:** Gaskets for installation

BEFORE PROCEEDING WITH FABRICATION, PLEASE ENSURE THAT YOU VERIFY ALL MEASUREMENTS. IT IS CRUCIAL TO DOUBLE-CHECK THE SPECIFICATIONS TO AVOID ANY DISCREPANCIES. FOR THE MOST UP-TO-DATE TECHNICAL SPECSHEETS AND CUTOUTS, KINDLY VISIT **GLASSHARDWARE.COM.**

Date: 11/26/24