FRONT

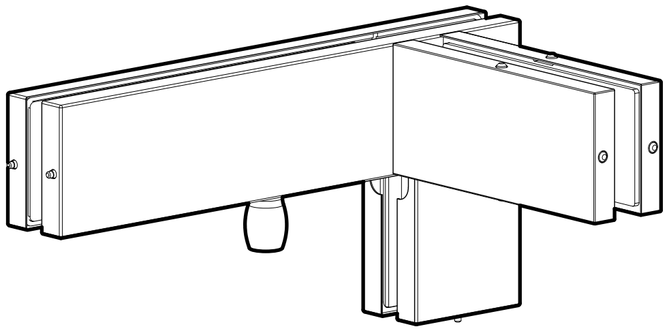

BACK

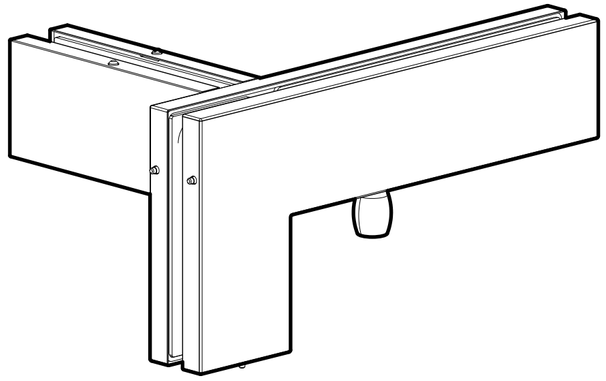

RIGHT SIDE VIEW

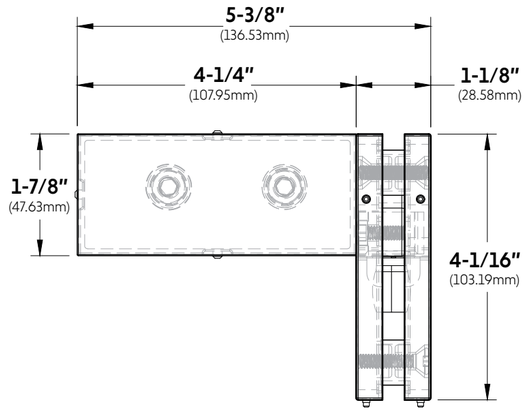

GLASS CUT OUT

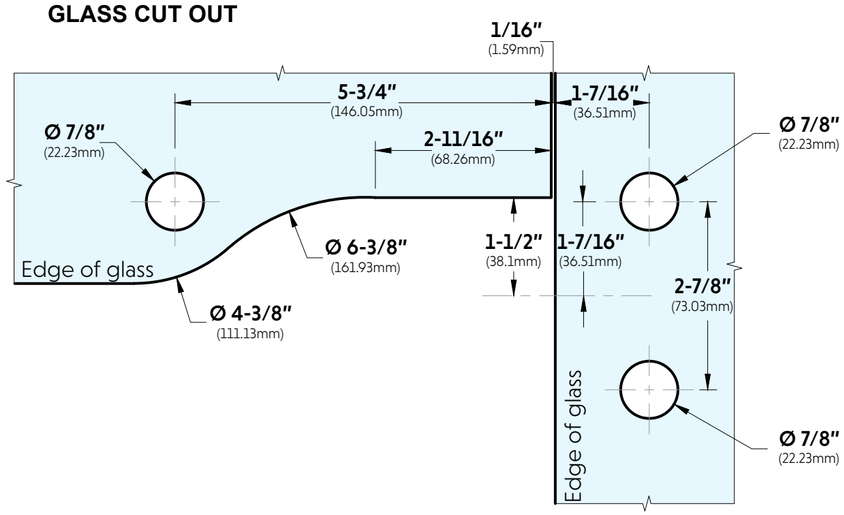

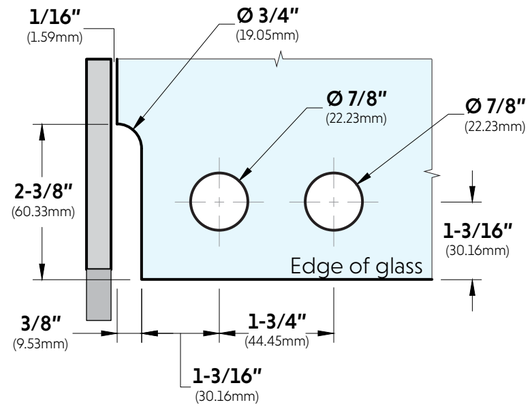

FRONT VIEW

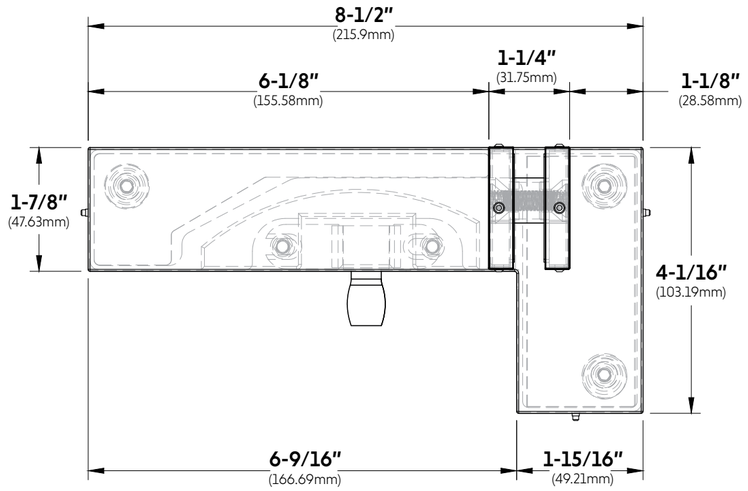

EXPLODE A

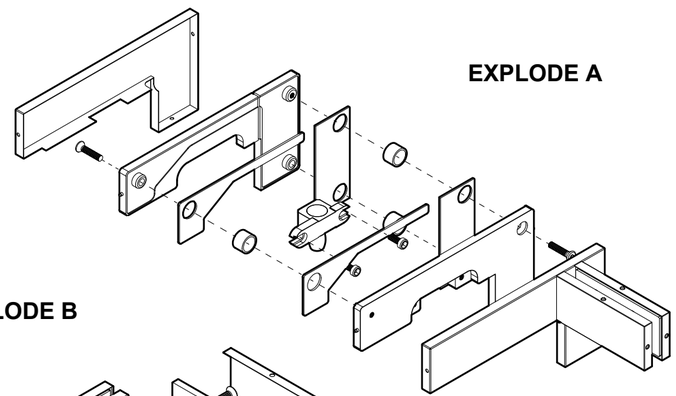

EXPLODE B

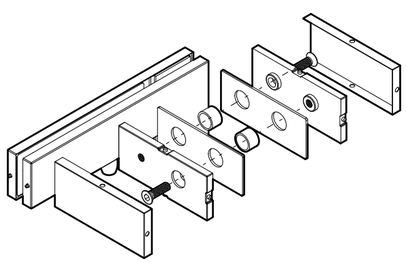

TOP VIEW

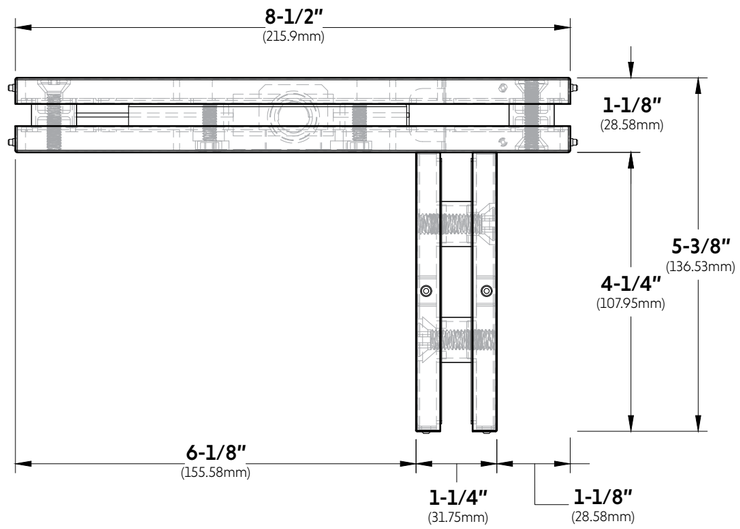

LEFT SIDE VIEW

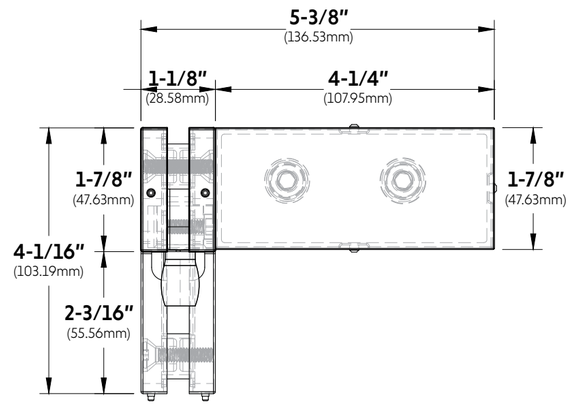

IGT glasshardware.com

10101 NW 79th Ave
Hialeah Gardens, FL 33016
Phone: (877) 658-9008
Fax: (888) 280-2285

Product: **IGT Transom/Sidelite Patch Fitting With Left-hand Support Fin**

Code: PFH113L

Material: Aluminum Alloy / Stainless Steel

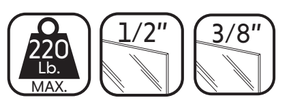

Specifications:

Glass thickness: 3/8" (10mm) to 1/2" (12mm). Cutout required - Tempered glass only

Includes: Gaskets, screws and fabrtication dimensions.