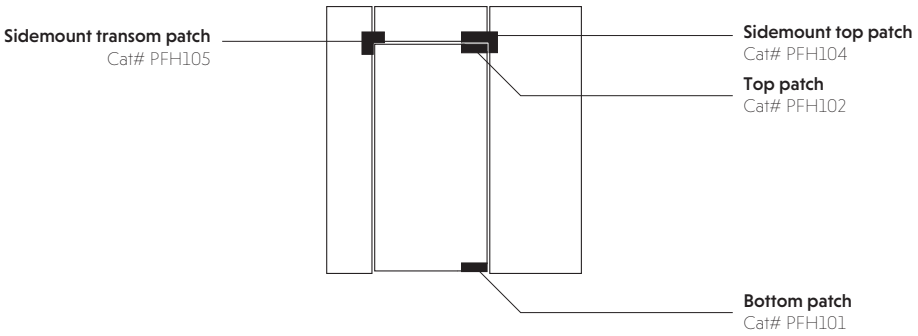

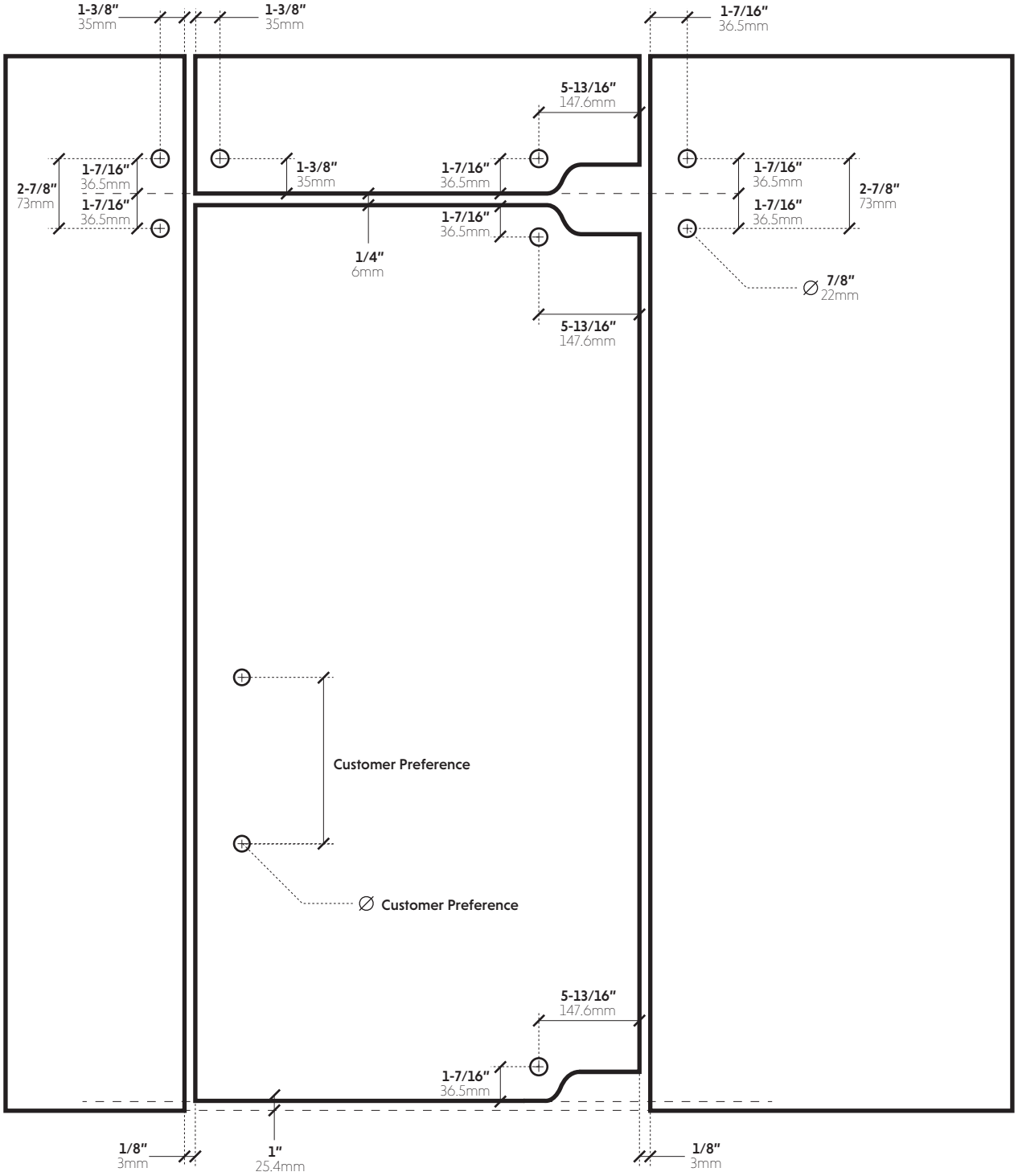

glasshardware.com

10101 NW 79 Avenue
Hialeah Gardens 33016
Phone: (877) 658-9008

Product:

Glass template for Patch Fitting installations

Code:	See CAT #'s above	Material:	304 Stainless Steel